THE NEWSLETTER FOR THE SEATTLE AREA TIMEX/SINCLAIR USERS

SWUG

GROUP

APRIL 1990

VOLUME 5
NUMBER 4

President: Derryck Turner
V.P. : Gerry Desmaris
Secretary: Malcolm Post
Treasurer: Dave Battershill
Librarian: Dale Fritz
Editors : Robert Cazares
: Chuck Kereluck

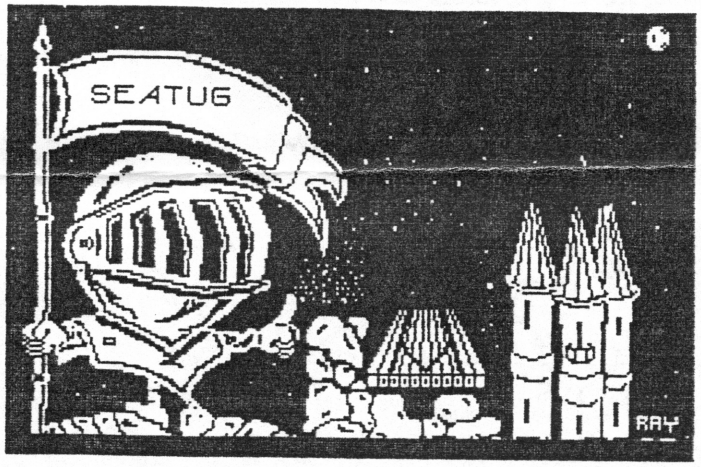

APRIL MEETING:
APRIL 5th, 1990
THURSDAY 7:30pm

8517 35th Ave. NE. Seattle
UNIVERSITY FEDERAL SAVINGS BANK

SEATUG General Info Address:
Derryck Turner
10909 N.E. 45th St.
Kirkland, Wa. 98033

NEWSLETTER SUBMISSIONS:
Chuck Kereluck
9013 32nd Ave. N.E.
Seattle, Wa. 98115

NEWSLETTER EXCHANGE:
Robert Cazares
118 N.W. 84th St.
Seattle, Wa. 98117-3044
(206)789-3275

SEATUG supports ZX/80, T/S 1000, T/S 1500, T/S 2068 and QL computers.

This months contents:

1) Hardware Review
Trackball Controller
By: Chuck Kereluck

2) Minutes/NO MINUTES THIS ISSUE.
If you were there you now know what happened!

3) Random Bits
By: Chuck Kereluck

4) Caveat
By: Chuck Kereluck

WE FINALLY MADE IT TO THE COVER THANKS TO MIKE DIREINZO AND HIS DIGITIZER BOARD. WE KNEW WE COULD DO IT SOMEHOW. THE SMUG DIGITZER IS ON THE WAY BACK TO THEM FOR INSPECTION SO HOPEFULLY WE WILL HAVE THAT BACK SOON. MAYBE THEN YOU'LL BE OUR NEXT COVERPERSON.

TOP LEFT CLOCKWISE: MALCOLM, PAT, CHUCK, DAVE, ROBERT

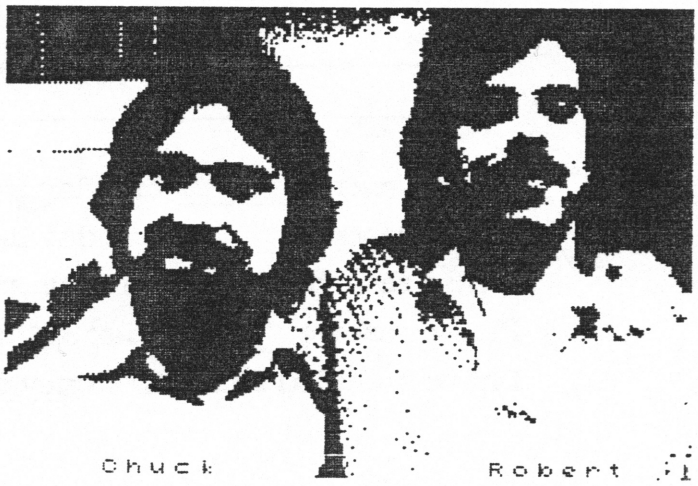

Chuck Robert

S.M.U.G. Presents

The 1990 SINCLAIR COMPUTER Exposition

MILWAUKEE WISCONSIN

June 2 & 3 /Banquet Friday Night June 1

SEMINARS, DOOR PRIZES, SWAP SHOP, SOFTWARE, PERIPHERALS, HARDWARE, AND LOTS OF OTHER STUFF

Location

WAUKESHA HOLIDAY INN (414) 786-0460

Hwy 18 & I94 Waukesha, WI 53186

There will be a **SNUG** meeting Saturday Night June 2, 1990

Ticket Information:

		in advance	at the door	
One day	:	$ 4.00	$ 5.00	
Both days	:	$ 7.00	$ 9.00	
Banquet	:	$16.00	$16.00	Limited seating
Table	:	$25.00 (incld. 2 day badge)	$25.00	Limited table space

Tables are 6 feet by 30 inches

For **MORE INFORMATION** contact

Bill Heberlein
5052 N. 91st Street
Milwaukee, WI 53225

or

Neal Schultz
call 7 - 10pm
(414) 353-4522

for **RESERVATIONS** mail to:

Expo Reservations
P.O. Box 101
Butler, WI 53007

Detach and Mail

Name _____ Phone (____) _____

Address _____

City _____ State _____ Zip _____

Please reserve _____	one day badge	@ $ 4.00	each = $_____
Please reserve _____	two day badges	@ $ 7.00	each = $_____
Please reserve _____	Banquet tickets	@ $16.00	each = $_____
Please reserve _____	6' x 30" tables	@ $25.00	each = $_____
I have included a check/money order		for	total = $_____

TECHNICAL TALK-NOTES-DIAGRAMS-DATA-SUGGESTIONS-INFORMATION...

Random Bits

TECHNICAL TALK-NOTES-DIAGRAMS-DATA-SUGGESTIONS-INFORMATION...

by Chuck Kerelick

THE SEATUG GREMLIN STRIKES AGAIN-- AND MIKE DI RIENZO STRIKES BACK!

That cursed spoiler of SEATUG demos, 'The Gremlin', struck again, last month. Way before the meeting even began!

President Derryck Turner was planning to demo his Oliger disk system menu program, but was thwarted early, when that sneaky gremlin inhabited the body of Derryck's personal physician and convinced Derryck to tend to some long-neglected, minor ailment. This effort resulted in our President not showing up, at all, nullifying the evening's planned event!

What a dilemma! Did this mean that there would be no show? No way! In walks SEATUG's newest arrival (thanks to an invitation by Robert Cazares), software author and hardware designer, Mike Di Rienzo! Mike comes strolling in with the confidence of someone who has not seen our past demo attempts. Without this stumbling block to impede him, he began to demonstrate his PIX-FX graphics manipulation program and (with further indignation to the Gremlin) to 'fix' last month's video-digitizing attempts!

Both attempts, were proud to announce, were tremendously successful! PIX-FX held everyone rivitted and the video digitizer totally redesigned by Mike, had all "hams" present, lining up to be digitized.

It was reported that out of the corners of some eyes, the now-wounded Gremlin was barely seen, much less experienced, slumped to the floor, writhing in pain, in a far corner of the room.

Thank you Mike Di Rienzo, for breaking the 'losing streak'that has palgued SEATUG! Can we keep it up.....?

SEATUG WELCOMES TWO MIKES

Another 'Mike' introduced to our club, is Mike Stone. He is the only soul among any of us 'old hands', believe it or not, to be in possession of and using a Z88 laptop computer! Maybe we can get a demo on this, soon?

Let's welcome the two Mikes to our group and thanks go, again, to Robert for his efforts in 'doing two in one night'!

A WORD TO THE WISE

Software developers and vendors can have a difficult life. Not only are attempts made, most times successfully, to illegally copy a choice program, before it is public-domained, but sometimes, some vendors will attempt to sell someone else's programming efforts, without the benefit of a distribution contract! You know, those funny little agreements between the author and the 'store' that says the author gets in on a few of the bucks that the 'store' makes for selling the author's stuff??

Apparently, this is the very situation that is going on with PIX-FX's distribution. At present time, the only authorized vendors of this is VectorWare and RMG. Therefore, if you see any ads for PIX-FX being distributed by anyone other than those just mentioned, a word to the wise:They're not authorized.

2068 REPAIR MANUAL COMES IN

After a still longer wait from the Seattle Public Library, down town branch, they finally have acquired the Sams Photofact repair manual for the TS2068 computer. I had written a special request to them to get their hands on a copy,well over a year ago. They stated that they'd act on it, but it might take a while. It did.

At any rate, I now have a photocopy of the whole thing. If anyone is interested in seeing it, or parts of it, give me a call or drop a line.

Now, I might be able to fix that bum 2068 that had a 2040 power supply plugged into it!

OH, YEAH!

Just in case you were wondering, Derryck is doing fine, vacationing in sunny Costa Rica!

SWYM is being 'picked up' by Time-Life, Inc.,thanks to a very generous contract. Subscription rates for the new, hard-backed SWYM will triple and ad rates will quadruple (**still** a good deal!).

April fools.

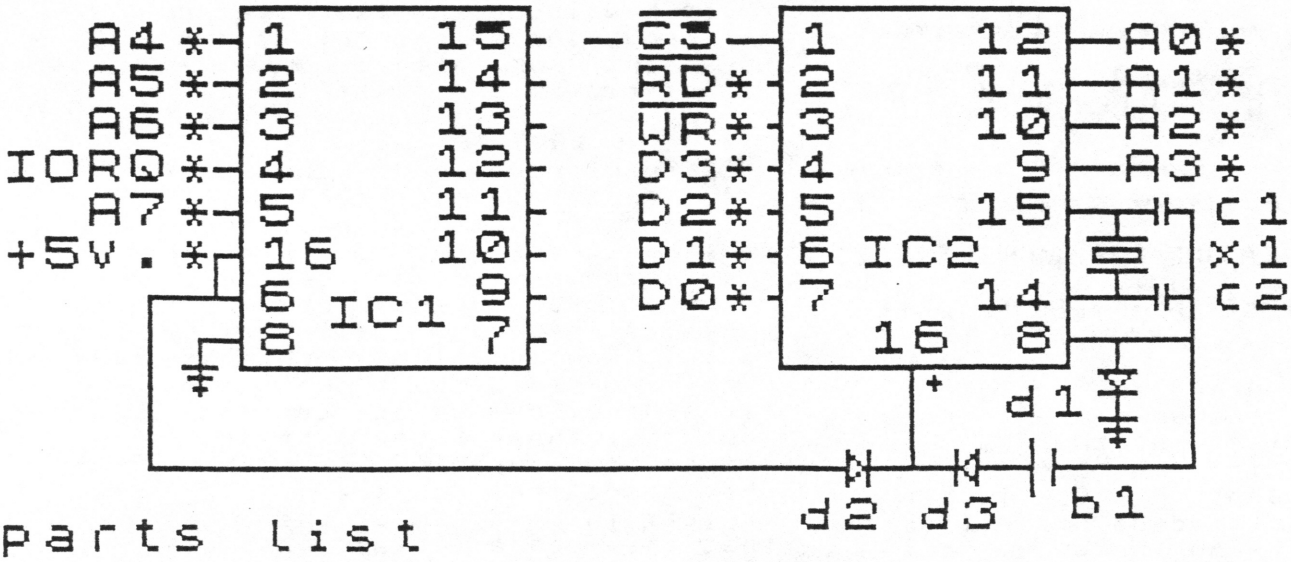

parts list

IC1	74HCT138 decoder
IC2	MM58274 National Clock
d1,d2,d3	1N914 diodes
c1,c2	22pf capacitors
x1	32768 Hz. crystal

* connect to 2068 expansion connector

CADZ SCHEMATIC 11/4/89

TEACHING YOUR 2068 TO TELL TIME

by Larry Zunk

This is a very simple circuit that requires few parts.

Software is required to read and interpret the clock signals. When writing it, you must mask the high "nibble" of each clock register byte-read, as the chip uses only four bits of the data bus. To read the clock from BASIC, you can add four 10K pull-up resistors to the upper four data bus lines. Then, when you read a register, subtract 240 from the read value to mask the high "nibble."

The chip select (CS) of the clock chip can be connected to any of the decoder output pins (7, 9, 10, 11, 12, 13, 14, 15). The clock uses 16 addresses, so decoder pin 15 will give you clock port addresses from 0 to 15, pin 14 will use addresses 16 to 31, etc. The chips are CMOS, so no buffers are required.

I will sell the software to read this clock for $10. The relocatable machine code is 250 bytes. The time and/or date can be displayed anywhere on the upper or lower screen and INK, PAPER, INVERSE and FLASH attributes can be used.

ZUNK CUSTOM ELECTRONICS
1419 Ferris
Waxahachie, TX 75165

HARDWARE REVIEW

ROKLAN UN—ROLLER CONTROLLER

It looks like a track ball! It works like a joystick! Which is it? What the heck is it? It's the Un-Roller Controller from Roklan Corporation!

Roklan is a company from out of Arlington Heights, Illinois. However, this item is being distributed through Electronic Supermarket, a surplus outlet that can be contacted by writing to 119 Foster Street, Peabody, MA 01960.

But enough of that, for now. Let's get down to business! After arriving via UPS, I wasted no time unpacking the boxes. .There was the original one from Roklan that contained two controllers, plus the larger one from Electronic Supermarket that contained the Roklan box.

Looks can be deceiving. The strength of deception can be so strong, sometimes, that it seems to over-ride all else--including any cold logic you may have previously stored.

So, after ripping open one controller, what is the first thing I attempt? Yup! You guessed it! It just doesn't want to work that way!

This is very much a two-hand unit. Measuring 5"X 5"X 2-1/8", the Un-Roller is positioned so that the name, "ROKLAN" is at top. The cable plugs into anything that is Atari or Commodore 64/VIC 20 (Remember them?) compatible, including the TS2068 and modified 1000s. The user firmly grasps the left edge of the unit with his left hand and the right edge with the right. Thumbs are then used to slightly click the "dome" of the "roller" forward, backward, left, right or anywhere in-between. According to the supplied literature, "This new concept in controller design gives you the control you desire, without the problems of joysticks. No more blisters from grasping the joystick handle too tightly. No more broken joystick handles during intense play."

I don't know about the blisters (Do people actually get them from joysticks? Is there such a thing as "video palm"??), but not ripping a standard stick out by the roots, while you're frantically watching your life pass before your eyes in "Flight Simulator" is like manna from heaven! Other games enjoy a similar experience, since reflex now involves a twitch of the thumbs, instead of a tight-fisted jerk (But then, again, there may be a 'tight-fisted jerk' on the other end, anyway!). A conventional 'fire' button is situated on the upper-left corner.

Aside from games, how about other applications? Drawing any picture with Tech Draw Jr. is a breeze. It actually feels easier to move your cursor around with the Un-Roller than it does using a conventional joystick. You sense a quicker response, better resolution for your pics.

Using it does take a bit of getting used to. However, once old perceptions are shaken and new ones taken, you'll begin to wonder how you ever got along with that clunky, old joystick handle.

There is, above all, one improvement that can be done to enhance the Un-Roller's usefulness. As a matter of fact, the problem that this improvement stems from is inherent in most Atari-type joysticks. The problem in question is how to keep the 'fire' button held down when it becomes advantageous to do so, like being in 'draw mode' in a graphics design program or mercilessly blasting away everything in the universe.

The solution is to add an extra 'fire-hold' toggle switch to short-out the existing 'fire' button. I found that the upper-right corner of the unit gives a convenient location for this switch. However, since there is plenty of room both on and inside the thing, mounting can be almost anywhere.

Now, when I want to draw a picture in 'free form', I flip up the toggle switch and go merrily drawing away!

This was a good addition for the ol' 2068. The old Atari-type sticks have been permanently assigned to the TS1000, where they'll serve many years of useful service!

I recommend you give these a try. Total cost, including shipping for a box of two controllers from Electronic Supermarket was about $10.

Not a bad deal!

CAVEAT EMPTOR

PC WHERE? HOUSE

by Chuck

A funny thing happened on the way to acquiring a printer: not funny-ha-ha but funny-strange.

How would you like to buy a major piece of equipment, take it home, try it out, find out it wasn't what you wanted, take it back, get your refund, then find out, weeks later, that you really didn't get the refund??

Alternately, want to *really* find out how a computer store operates? Test their 3-day return policy.

All of this happened at an establishment called PC WAREHOUSE, Seattle branch.

I had been looking for a 24-pin, dot-matrix printer for a while and was interested in a certain Panasonic model. Locating a local vendor that actually had them in stock to sell was a bit of a surprise. Epson seems to be very popular, around here. However, not only had I located a direct outlet but the printers were on sale!

Off I go to the store, plastic in hand. Not being totally sure of its compatibility with my 2068 system, I get the prior OK from the store to return it with in three days if it doesn't work the way I want it to.

Three days later, the printer was returned, receipts copied, and was told that my credit account would be deleted for that purchase. "Great!", I said.

About six weeks later,the bill for the credit card comes. Guess what? The charge is still there! Add to that a correct charge of another printer from elsewhere, and the effect is to kindly pay double for a single purchase! No thanks.

I call the store. What have you guys been doing? "We've been very busy," I'm told,"We'll take care of it." Uh-huh. How about now? The credit card bill is quickly approaching DUE DATE. I get them to mail the paperwork stating the initial charge has been voided. In a couple of days i have it. Great! Right on the aforementioned DUE DATE, I go to the bank to pay off the credit card. I take all relevant and irrelevant paperwork to explain why there's a large sum that I'm not paying for. The bank teller does a couple of verification checks.

Guess what they tell me?? That original printer charge, the same one which I now have papers for, telling me that, yes, it has been erased from my credit bill, has not *yet* been erased!

Things start heating up, real well, at this point. I immediately call the credit company from the bank. The call is transferred *three* times, with my lengthy tale being retold at each stop.

"Send us a copy of your statements and we'll take care of it, as well as the finance charge.", I'm finally told. Well, this started to sound a little bit better, even though the finance charges were as much in error as anything else. The revised bill was then paid up to the new, reduced amount. Copies of everything were made and forwarded. Do I dare a sigh of relief?

Still more time passes and I and I receive the credit company's revised statement of my account. What's this? Finance charges? Plus, a separate letter stating reception of copied statements and, gee, the "merchant" will have to be contacted for further information and would you mind waiting another 45 days to clear up this matter?

The letter was sent in error, and credit company adjustments were easily made. Beginning in February, this whole mess has finally closed on March 26th.

As for PC Warehouse, be very wary. They seem to be eager to take your money and very reluctant to give it back.

Personally, any business whose accounting department is in such a mess will not survive for very long. Let's hope that PC Warehouse, Seattle (especially the 45th NE branch) will not have the opportunity to screw anyone, again.

HECTOR HACKER

BY CHUCK KERELUCK

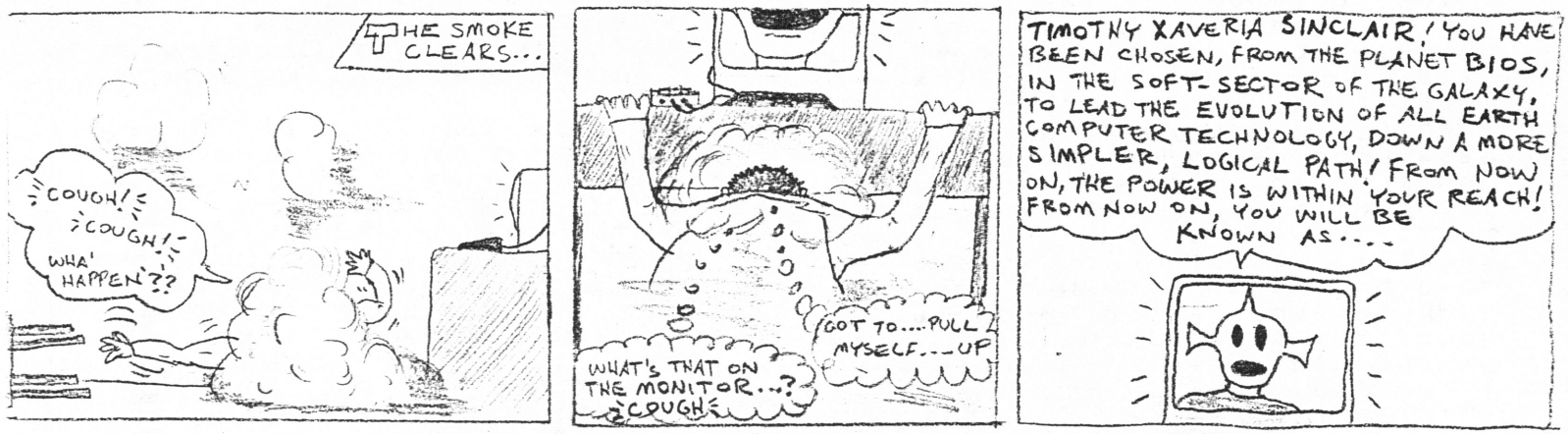

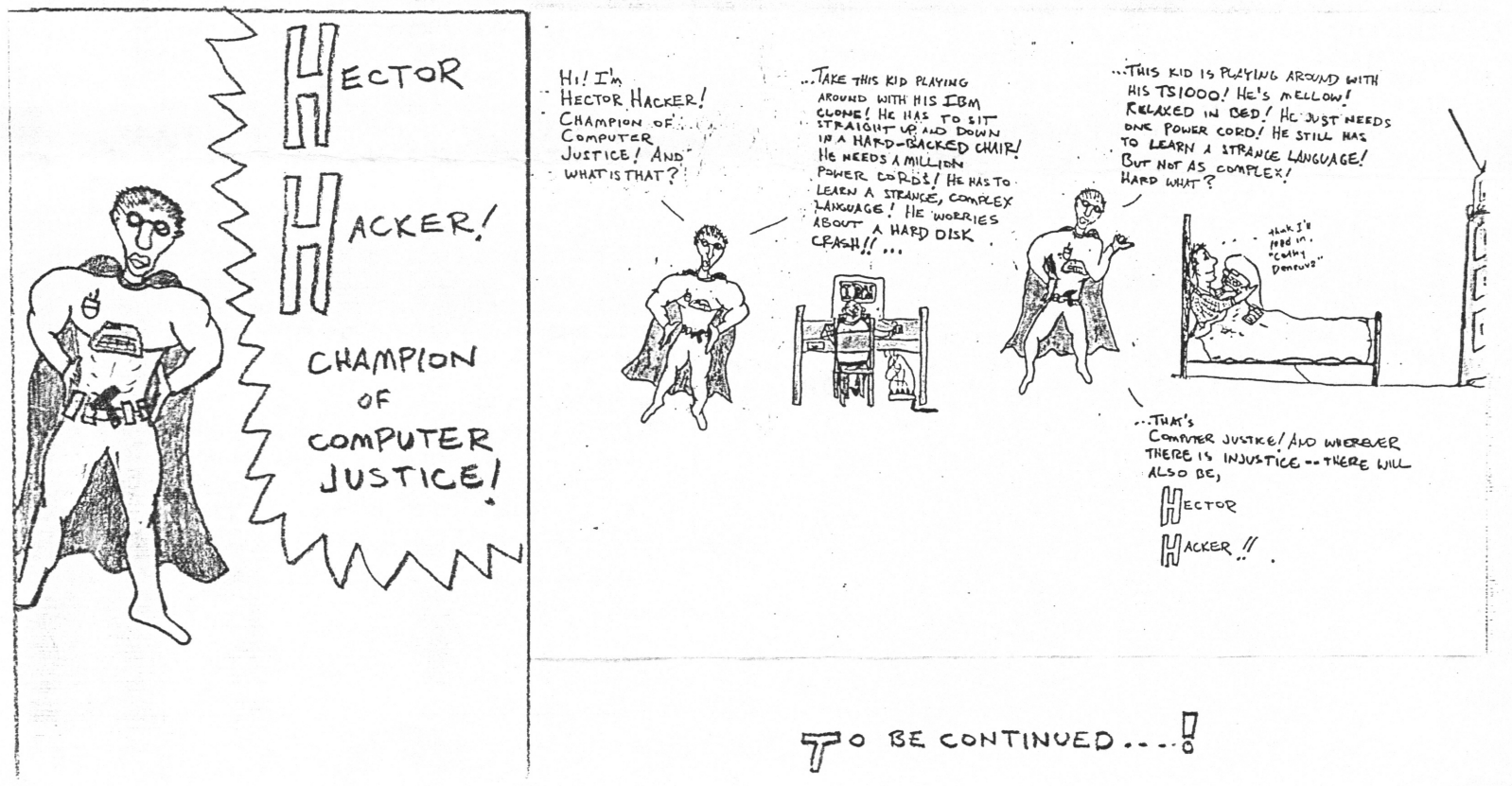

TO BE CONTINUED....!

New Jersey Man Shoots Computer
By Anonymous, ACGNJ

A man named Micheal A. Case was arrested at home after firing eight bullets from his .44-caliber revolver into his IBM personal home computer. These were not just any bullets, either: these were your hollow point "dum-dum" bullets, which as you sportsman know, give you the kind of "stopping power" you need when your up against a product backed by the world's leading manufacturer of data-processing equipment. Lt. Donald Van Tassell of the Passaic Township police told me that Mr. Case was not very specific about his motive:"He said he just got mad at his computer and opened up on it." I want to state, that we are behind him one million percent. If we have reached the point in this country where a man does not have the right to bear arms against his own computer, then we might just as well pour new, improved Liquid Draino on the U.S. Constitution.
------PC NEWS & REVIEWS Oct 1989

Guilt trip of the 1990s'

You don't call me, you don't write me, you don't fax me.
------Seattle P.I. April 2, 1990

SWYM

SWYM is the official newsletter of the Seattle Area Timex Users Group. It is published monthly, with mailings due before the 1st Thursday of the month.

SUBSCRIPTIONS for non-Seattle area users are only $10/yr, to SWYM, c/o Dave Battershill, Treasurer, P.O. Box 64462 Tacoma, WA 98464. Free exchanges are made between other related clubs via the newsletter exchange program.

ADVERTISING is accepted and encouraged! Full-page, half and quarter-page ad space is available. Contact Robert Cazares or Chuck Kereluck for rates.

ARTICLE CONTRIBUTIONS are welcomed and encouraged. Use a variety of formats. Of course, the Pixel Print format is preferable. If used, make a tape copy and mail to Chuck Kereluck. For repeat contributers, mailed tapes will be returned. For modem users, articles (in either 2068 or IBM format) may be uploaded to the Challenger Bulletin Board System, in the TIMEX USERS room of the HARD-WHERE hallway. Call (206)827-0346. Typed, 8-1/2" X 11" text is acceptable.If diagrams are included, use a large mailer to accommodate the unfolded size. Articles supplied on ZEBRA FDD or IBM PC 5-1/4" or 3-1/2" disks are also acceptible. These will be returned to the author.

REPRINTS. Articles in SWYM may be reprinted for use in other newsletters, providing proper credit is given to the author and publication.